Track light SFZ series 15W GS-TL15WZI66

Product parameter

LED power	:	12.6W(36vDC 350mA)
Lamp consumption	:	15W
Adapter	:	Powergear 3 phase(4-wire, 6-wire)
Input voltage	:	200-240vAC
UGR	:	Lens 12-15
Size	:	φ66*L130mm
Life span	:	50,000 hrs
Warranty	:	5 years
Beam angle	:	15°-60° zoomable

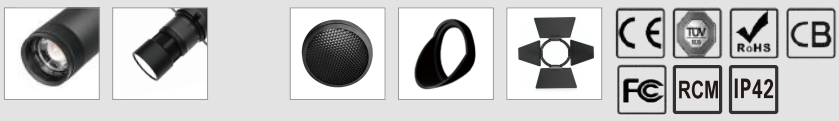

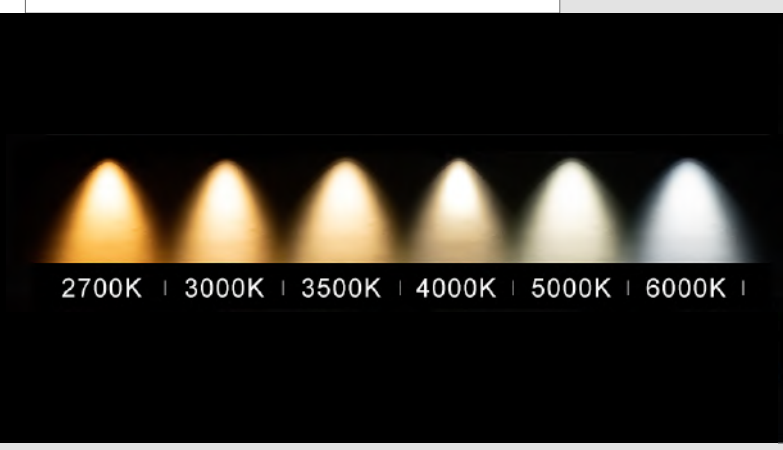

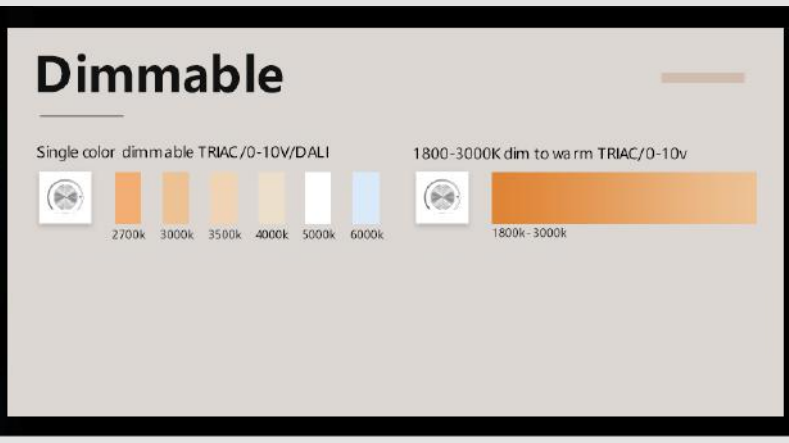

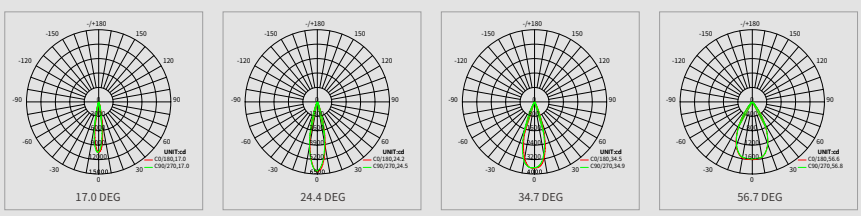

Datasheet

Part No.	COB brand	CCT	Output			Beam angle
			CRI80	CRI90	CRI96	
GS-TL15WZI66S	GOSUN	2700K-7000K single color	1100-1300lm	900-1100lm	800-900lm	15°-60° zoomable
GS-TL15WZI66C	CITIZEN 1203		1200-1400lm	1000-1200lm	900-1000lm	
GS-TL15WZI66T	TYANSHINE	3000k/4000k/5700k	no	950-1200lm	no	

Packing

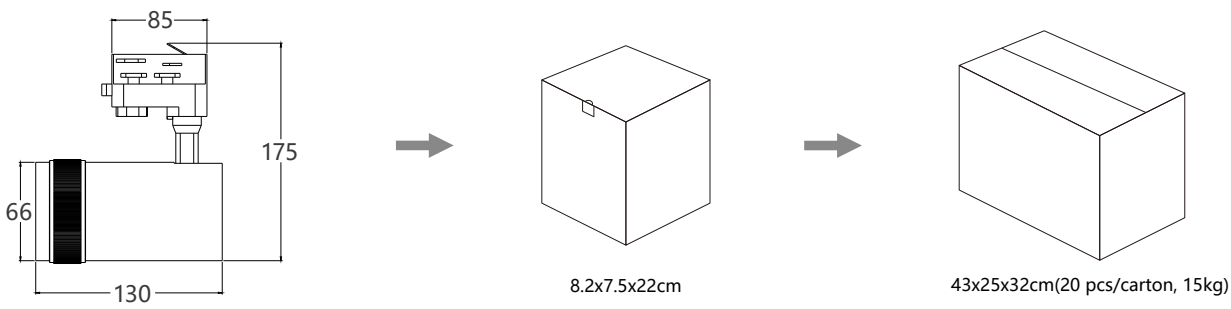

Installation Instuction

Warning: Make sure that the power on the track rail is off before installation.

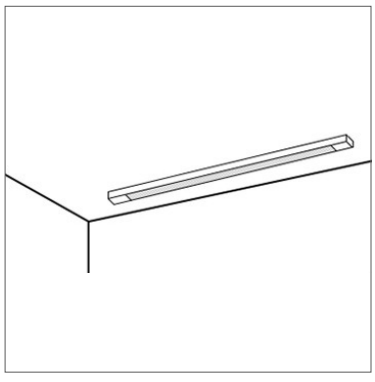

1. Fix the track rails on the suspended ceiling

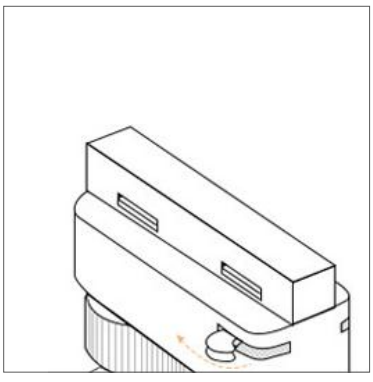

2. Make the power adaptor set to OFF

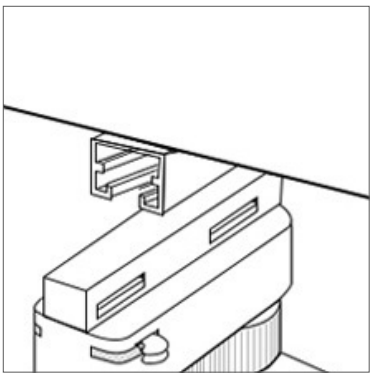

3. Embed the track light on the track rails

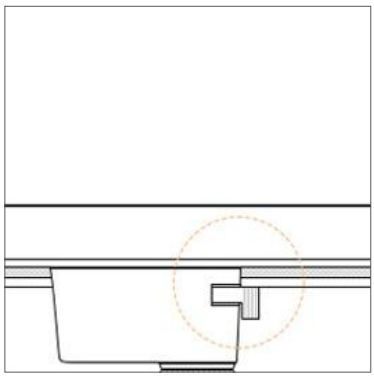

4. Turn the handle 90° degrees according the direction as shownin the left picture,make sure theadaptor be locked in the track rails